CROSS SECTION DRAWING

TUSCANY DOUBLE-HUNG WINDOW 8225: Block Frame

CAD File Scale: 1" = 1" (Full Size)

File Name: 8225-01-BLOCK-V

Units: INCH [mm]

VIEW: VERTICAL

1.800.MILGARD

milgard.com
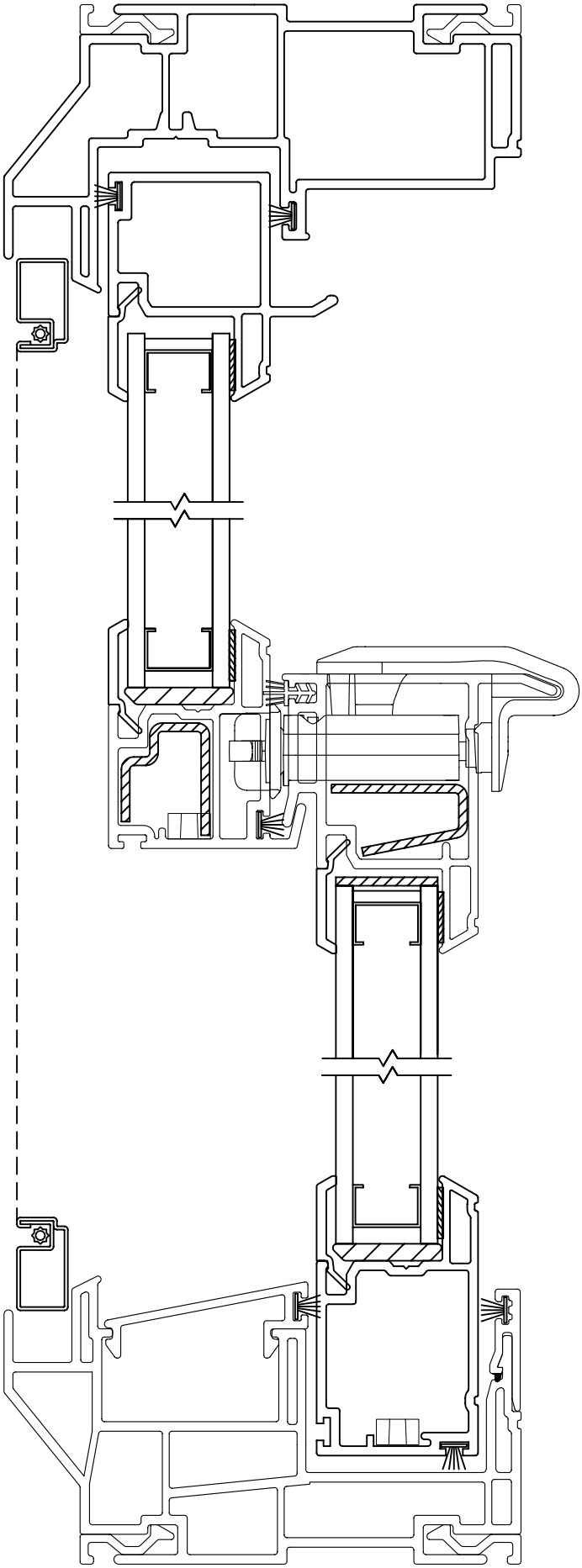
Due to continual research and development, details may be changed at any time. © 2009