CROSS SECTION DRAWING

MONTECITO RADIUS WINDOW 8330: 1" Fin w/Stucco Key

CAD File Scale: 1' = 1' (Full Size)

File Name: 8330-01V

Units: INCH [mm]

VIEW: VERTICAL

1.800.MILGARD

milgard.com
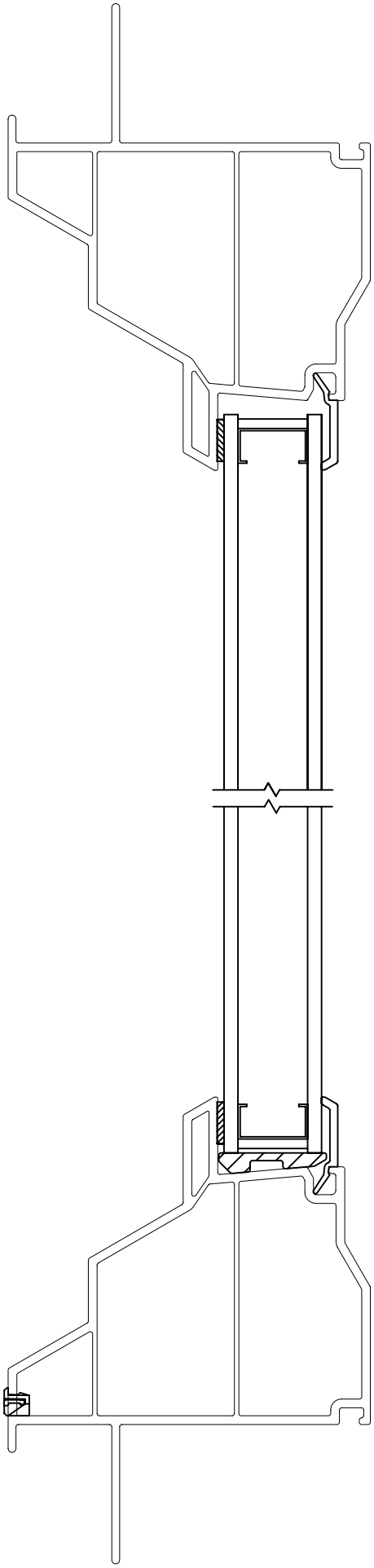
Due to continual research and development, details may be changed at any time. © 2009